INFRARED OIL HEATER

VAL6 MPX

SUNLIGHT WARMTH TO THE COLD SPACE

Service Manual

Contents

1. Names of components ---------- 2
2. Safety Devices ---------- 3
3. Specifications ---------- 4
4. Wiring Diagam ---------- 4
5. Sequence Time Chart ---------- 5
6. Troubleshooting ---------- 6
7. Standard resistance & Voltage ---------- 13
8. Check & Repair ---------- 15

Shizuoka Seiki Co.,Ltd.

2018.05

1 Names of components

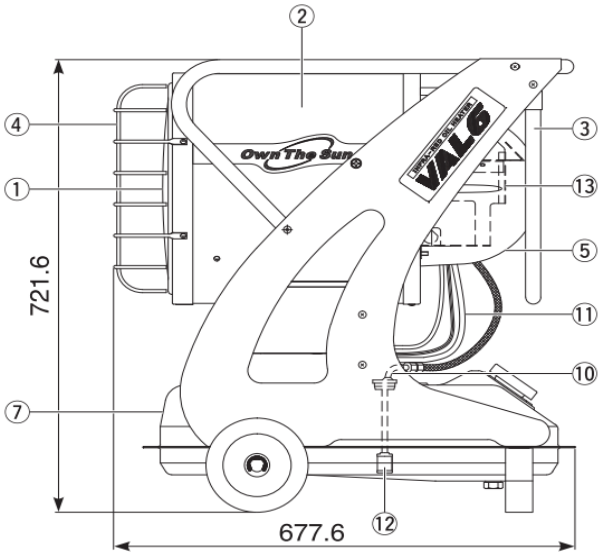

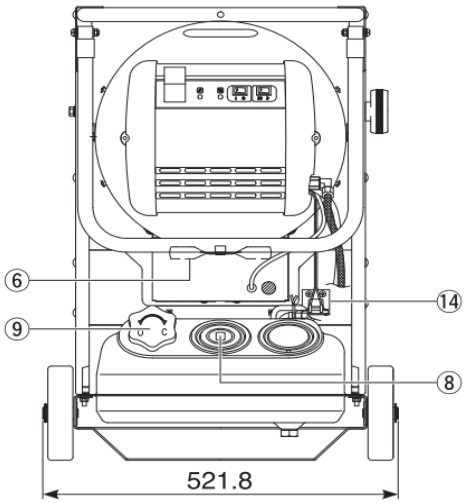

① Radiation disk
② Casing
③ Handle
④ Guard
⑤ Burner Cover
⑥ Blower
⑦ Fuel Tank
⑧ Fuel Gauge
⑨ Fuel Tank Cap
⑩ Suction Pipe
⑪ Return Line
⑫ Filter Element
⑬ Burner Section
⑭ Tip-over Switch

★ Burner Section

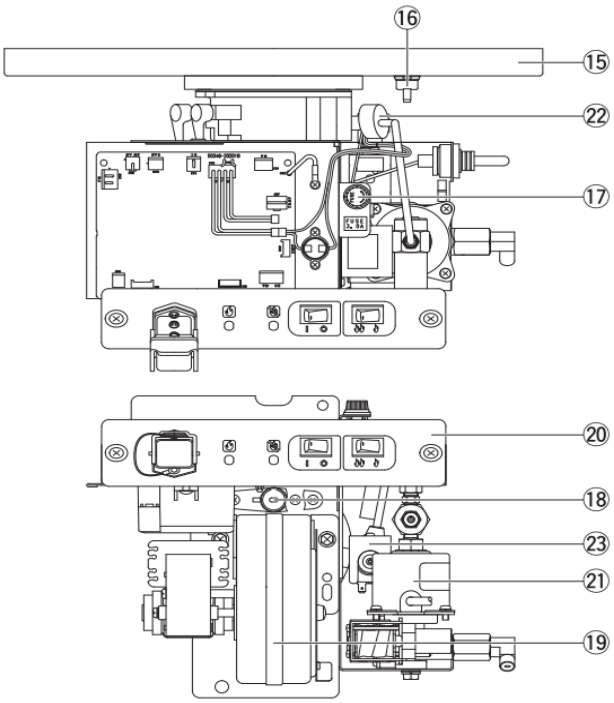

⑮ Insulating Board
⑯ Overheat Prevention System
⑰ Fuse
⑱ Flame Monitor
⑲ Fan Motor
⑳ Switch Section
㉑ Fuel Pump
㉒ Fuel Preheater
㉓ Solenoid Valve

★ Switch Section

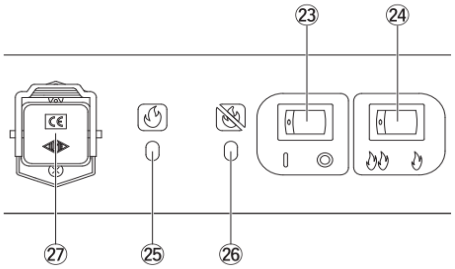

㉓ **Operating Switch**
This ignites or extinguishes the flame. **(Refer to pages 9.)**

㉔ **Change-over Switch**
This chages over combustion in two step.

㉕ **Operating Lamp**
This is lit while (the heater is) operating and cooling down.

㉖ **Misfire Lamp**
This is lit when the flame is extinguished irregularly.

㉗ **External Thermostat Connector**

2 Safety Devices

Description of Safety Devices	
⑭ **Tip-over Switch**	Automatically extinguishes the flame when motion or an impact is detected during operation. **Operating condition** : The misfire lamp lights and if the heater is operating, the fan will cool down the heater for about 3 minutes (hereafter referred to as post purge).
⑯ **Overheat Prevention System**	Automatically extinguishes the flame should the heater overheat. **Operating condition** : The misfire lamp lights and if the heater is operating, the fan will cool down the heater for about 3 minutes (hereafter referred to as post purge).
⑰ **Electrical System Protection (Fuse)**	Cuts off power to the heater should an electrical surge pass through the circuit caused by damage to the heater, etc. **Operating condition** : The whole operation stops.
⑱ **Flame Monitor**	This automatically extinguishes the flame when ignition fails or flame goes out during the operation. This monitor, when it detects any irregularity before ignition, automatically extinguishes the flame. **Operating condition** : The misfire lamp lights and if the heater is operating, the fan will cool down the heater for about 3 minutes (hereafter referred to as post purge).
㉒ **Fuel Preheater**	This fuel preheater warms the fuel up to prevent its viscosity from rising. This starts to operate at the time of plugged-in if the ambient temperature is below 5°C (41°F).
Anomaly detection system for fan motor	This automatically extinguishes the flame when some errors are detected in fan motor such as cable disconnection.

When the flame is extinguished, turn『OFF』the operating switch. Then turn『ON』the operating switch again after the problem is solved.

3 Specifications

Model Type		VAL6MPX5	VAL6MPX1
Type		Radiated/Direct-fired	
Ignition System		High intensity discharge	
Fuel		#1DIESEL(KEROSENE)	
Fuel Consumption		High : 0.48GAL/h , 1.55kg/h	High : 1.8L/h , 1.55kg/h
		Low : 0.42GAL/h , 1.38kg/h	Low : 1.6L/h , 1.38kg/h
Heat Output		High : 67,500BTU , 19.8kW	High : 15,800kcal/h , 18kW
		Low : 60,000BTU , 17.6kW	Low : 14,000kcal/h , 16kW
Tank Capacity		6.6 gallons	25liter
Continuous Operating Time		High : 13.7hours	
		Low : 15.7hours	
Dimensions	inch	30.1(H)×20.5(W)×27.7(D)	28.4(H)×20.5(W)×26.6(D)
	mm	763(H)×520(W)×703(D)	720(H)×520(W)×675(D)
Dry Weight		70.5Lbs , 32kg	
Power Supply		AC120V 60Hz	AC230V 50Hz
Power Consumption		When ignitiong : 100W	When ignitiong : 100W
		When burning : 120W	When burning : 112W
Electric Fuse		3A	1.6A
Operating Noise Level		High : 59.4dB	
		Low : 57.8dB	
Airflow		110CFM	
Safety Systems		Tip-over Switch	
		Flame Monitor	
		Electrical System Protection	
		Overheat Prevention	
		Anomaly detection system for fan motor	
Accessory		Nozzle	
		Filter Element	
		Nozzle Wrench	

4 Wiring Diagram

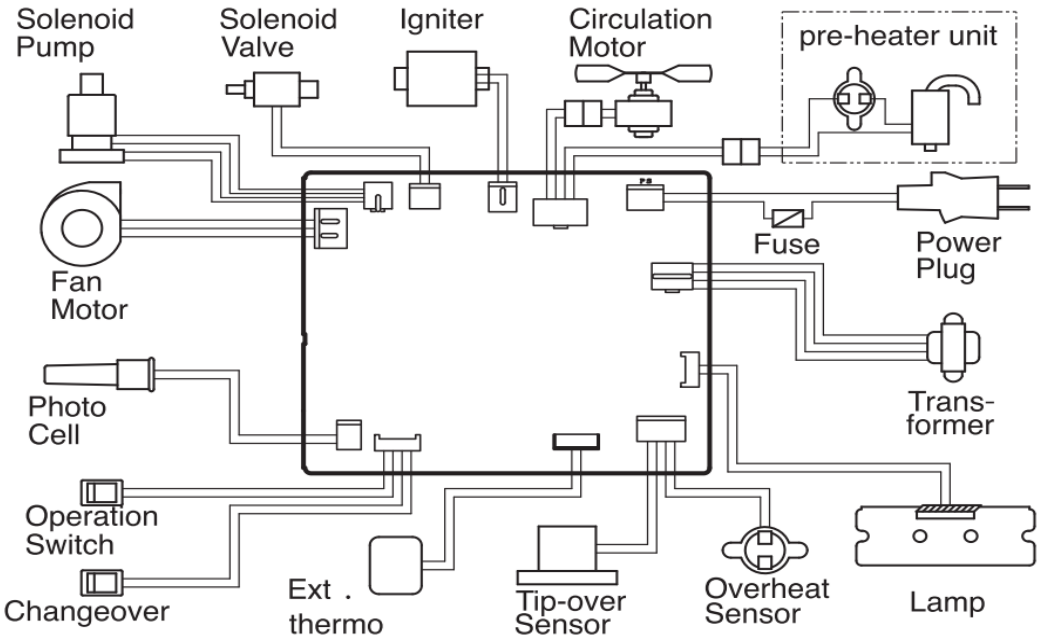

5 Sequence Time Chart

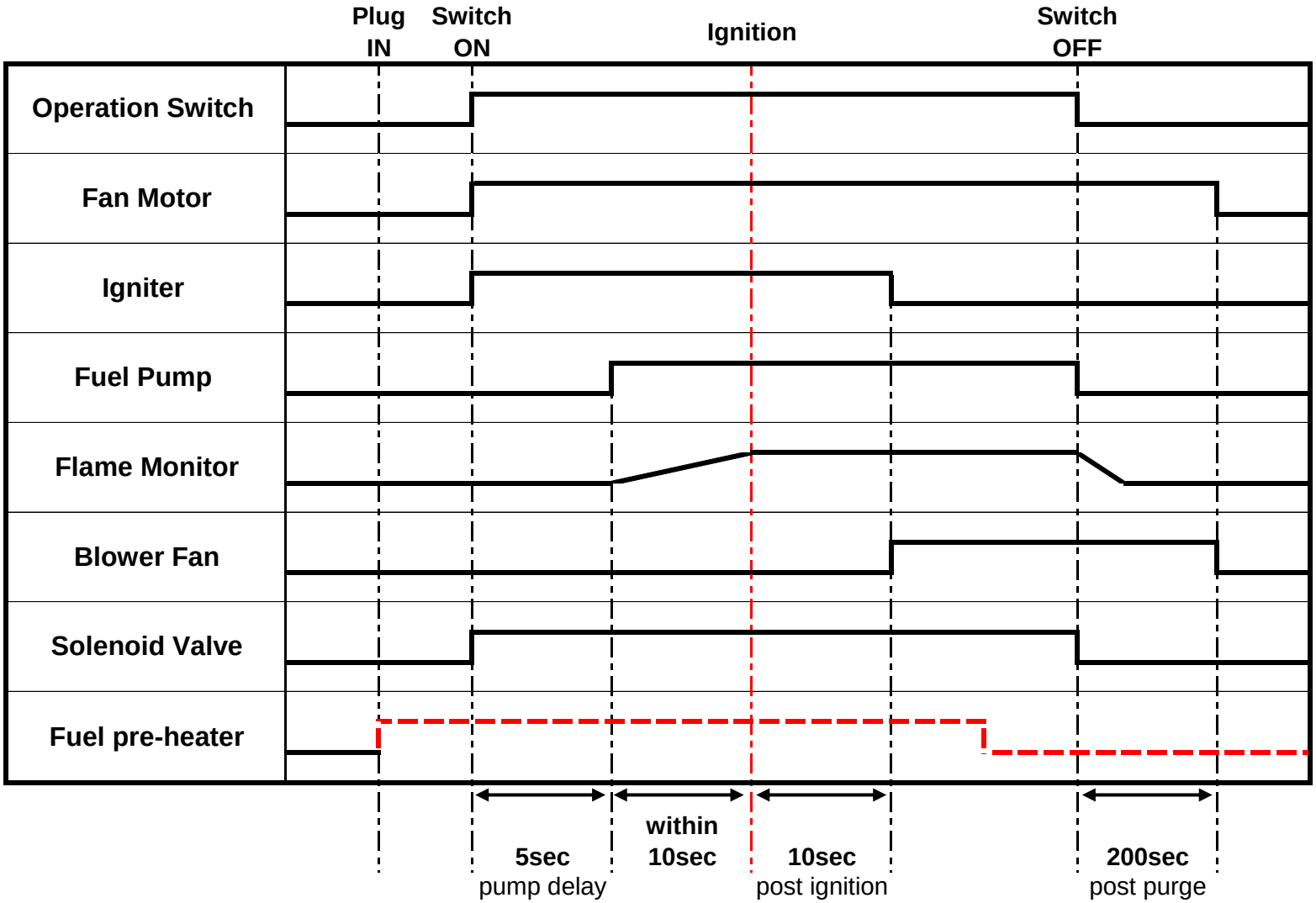

※Fuel pre-heater : Operating when the temperature in the inside of burner cover falls below 41 degrees Fahrenheit (5 degrees Celsius) and stopping when it reach over 68 degrees Fahrenheit (20 degrees Celsius).

6 Troubleshooting

	Phenomenon		page
1	The heater does not start	The lamp does not light on	7
		Operation lamp is lit	
		Misfire lamp is lit	
2	The heater does not ignite (though the heater is working)	Fuel pump does not operate at all	8
		No fuel or a little fuel is pumped up	
		Igniter does not spark. [Igniter does not operate]	
		Sequence of operation is normal, but it doesn't ignite	
3	Misfire within 10 seconds after ignition	Misfire lamp is lit	9
4	Combustion stop during the operation	Misfire lamp is lit	10
5	Odor comes out		
6	Smoke comes out		11
7	Combustion is not stable		
8	Fuel leaks		
9	Fuse blows out	When the plug is put into the socket	12
		When the switch is turned on	
		About 5 seconds after turning on	

VAL6 MPX5/MPX1 Troubleshooting

Phenomenon		Possible Cause	How to check	Result	Remedy
1. The heater does not start.	The lamp does not light on.	No power source supplied	Measure voltage of AC outlet. Standard: MPX5 - AC120V MPX1 - AC230V	If circuit tester indicates 0V, power source is disconnected	Connect power source
		Fuse blowout	Take fuse out from fuse box, and then check each lead with circuit tester	If multimeter reads ∞Ω, fuse blows out	Find a cause of blown fuse and replace with a new one
		Disconnection of power cable	Take power source connector (CN 1) out from burner controller, and then check each lead with multimeter	If either of the lead is broken, power cable is broken	Make sure the power cable is connected, or replace it
		Loose connection of power source connector	Plug in power source connector (CN 1) again, and then turn on	If it works normally, power source connector fails in contact	Plug in connector (CN 1) firmly
		Loose connection of transformer connector	Plug in transformer connector (CN 7) again, and then turn on	If it works normally, transformer connector fails in contact	Plug in connector (CN 7) firmly
		Failure of transformer	Measure voltage at output side of transformer connector (CN 7) Standard (purple-purple): about AC15V	If multimeter reads normal voltage at input side, and reads 0V at output side, transformer fails	Replace transformer
		Loose connection of operating switch connector	Plug in operation switch connector (CN 8) again, and then turn on	If it works normally, operation switch connector fails in contact	Plug in connector (CN 8) firmly
		Failure of operating switch	Take operating switch connector (CN 8) out, and then check lead with Standard: Conducting (0Ω) when	If it doesn't conduct when turned on, operating switch fails	Replace operating switch
		Failure of burner controller	Measure voltage at input side of transformer connector (CN 7) Standard (white-red): MPX5 - AC120V MPX1 - AC230V	If power source is normal and multimeter reads 0V at input side, burner controller fails	Replace burner controller
	Run lamp is lit	Loose connection between thermostat connector and cap	Attach the cap firmly	If it works normally, the cap fails in contact with thermostat connector	Attach the cap firmly
	Misfire lamp is lit.	Flame monitor lens is perplexed by direct sunlight	Unplug flame monitor connector (CN 11), and then start operation	It starts to operate	Avoid direct sunlight on radiation disk
		Failure of burner controller		It doesn't start to operate	Replace burner controller

Phenomenon		Possible Cause	How to check	Result	Remedy
2. The heater does not ignite.	**Fuel pump does not operate at all.**	Loose connection of fuel pump connector	Plug in fuel pump connector (CN 6) again, and then turn on	If it works normally, fuel pump connector fails in contact	Plug in connector (CN 6) firmly
		Loose connection of joint connectors in fuel pump	Plug in joint connectors in fuel pump again, and then turn on	If it works normally, connectors on fuel pump fails in contact	Plug in Joint connectors firmly
		Failure of fuel pump	Measure voltage at output side of fuel pump connector on burner controller Standard (blue-blue) MPX5 - AC60～96V MPX1 - AC 115～184V	If voltage is normal, fuel pump fails	Replace fuel pump
		Failure of burner controller		If multimeter reads 0V, burner controller fails	Replace burner controller
	No fuel or a little fuel is pumped up.	Fuel line is clogged	Disconnect each fuel line, and then clean up each of them	If it ignites after cleaning, fuel flow decreases because of clogged in fuel lines	・Clean fuel lines ・Clean and rinse the fuel tank with kerosene, alcohol or acetone
		Filter element is clogged	Check clarity of filter element	If filter is dirty, fuel flow decreases because of clogged filter element	・Replace filter element ・Clean and rinse the tank with kerosene, alcohol or acetone
		Nozzle is clogged	Replace nozzle	If it ignites, nozzle is clogged	・Replace nozzle ・Clean and rinse the fuel tank with kerosene, alcohol or acetone
		Loose joint in fuel lines	Check looseness of each joint	If heater ignites by joints fastened more tightly, air is absorbed into fuel lines at loosed joints	Fasten joints more tightly
		Fuel pump is clogged, or failure	Remove burner cover and fuel outlet line, and then turn on the switch	No fuel is pumped up, fuel pump is clogged or failure	Replace fuel pump
		Failure of burner controller	Measure voltage at fuel pump connector on burner controller standard (blue-blue) MPX5 - AC60~96V MPX1 - AC115~184V	If multimeter reads power supply voltage , burner controller fails	Replace burner controller
	Igniter does not spark. [Igniter does not operate.]	Loose connection of igniter connector	Plug in igniter connector (CN 4) again, and then turn on the operating switch	If it works normally, loose connection of igniter connector	Plug in connector (CN 4) firmly
		Failure of igniter	Measure voltage at igniter connector (CN4) on burner controller Standard (black-black): MPX5 - AC120V MPX1 - AC230V	If voltage is normal, igniter fails	Replace igniter
		Failure of burner controller		If multimeter reads 0V, burner control fails	Replace burner controller
	Sequence of operation is normal, but it doesn't ignite	Alignment of electrode is out of standard	Measure the alignment of electrode	If any part is out of standard position, out of alignment is cause	Replace electrode (adjust the position)
		Improper quantity of combustion air	Check gate opening of fan motor	If gate opening is unusual, quantity of combustion air is improper	Adjust gate opening. Normal scale: MPX5 - 2.5 MPX1 - 4.5

Phenomenon		Possible Cause	How to check	Result	Remedy
3. Misfire within 10 seconds after ignition.	Misfire lamp is lit.	Loose flame monitor	Open burner cover, and check if the flame monitor is in	If flame monitor comes off, it doesn't work	Put in flame monitor firmly
		Shortage of light sensed from flame	Take flame monitor out, and then check clarity of its lens	If lens of flame monitor is dirty less sensitive.	Wipe lens of flame monitor with soft cloth
			Remove burner, and then check clarity of burner cone and vane	If burner cone or fan is dirty, it senses little light	Clean burner cone and whirl vane
			Check extent of combustion air inlet opening	If opening is too extensive, flame is short because combustion air is too much	Decrease opening to reduce combustion air. Normal scale: MPX5 - 2.5 MPX1 - 4.5
		Loose connection of flame monitor	Plug flame monitor connector (CN 11) again, and then turn on	If it works normally, flame monitor connector fails on contact	Plug connector (CN 11) firmly
		Failure of flame monitor	Measure voltage at flame monitor connector on burner controller standard dark - about DC5V light - DC1.2V and under	If voltage doesn't change, flame monitor fails	Replace flame monitor
		Nozzle clogged	Replace nozzle	If it ignited, nozzle is clogged	Replace nozzle
		Filter element clogged	Check clarity of filter element	If filter is dirty, fuel flow decreases because of filter element clogged	Clean or replace the filter element

Phenomenon		Possible Cause	How to check	Result	Remedy
4. Combustion stops during operation.	**Misfire lamp is lit.**	Absorbing air into fuel lines from joints	Check looseness of each joint	If any joint is loose, air is absorbed into fuel lines from loose joint	Fasten joints more tightly
		Insufficient pumping of fuel because vacuum forms in fuel tank	Check if air intake of tank cap is clogged with dust	If air intake of tank cap is clogged, fuel flow is insufficient by vacuum forming in fuel tank	Clean air intake of tank cap
		Shortage of light detected by flame monitor	Take flame monitor out, and then check clarity of its lens	If lens of flame monitor is dirty, it detects a little light	Wipe lens of flame monitor with soft cloth
			Remove burner, and then check clarity of burner cone and vane	If burner cone or whirl vane is dirty, flame monitor detects a little of light	Clean burner cone and whirl vane
		Flame monitor connector is loose connection	Plug flame monitor connector (CN 11) again, and then turn on	If it works normally, flame monitor connector fails on contact	Plug connector (CN 11) firmly
		Failure of flame monitor	Unplug flame monitor connector (CN 11), and then check transition of resistance by changing quantity of light into flame monitor	If resistance doesn't change, flame monitor fails	Replace flame monitor
		Nozzle clogged	Replace nozzle	If it works normally, nozzle was	Replace nozzle
		Filter element clogged	Check clarity of filter element	If filter is dirty, fuel flow decreases because of clogged filter element	Clean or replace the filter element
5. Smell of fuel comes out.		Quantity of combustion air is too much	Check gate opening of combustion air inlet	If opening is too extensive, it burns imperfectly	Decrease gate opening of combustion air inlet. Normal scale: MPX5 - 2.5 MPX1 - 4.5
		Nozzle clogged	Replace nozzle	If it works normally, nozzle is	Replace nozzle
		Filter element clogged	Check clarity of filter element	If filter is dirty, fuel flow decreases because of clogged filter element	Clean or replace the filter element
		Incorrect nozzle	Check makers imprint of the nozzle if it is correct. Mark: 0.4USgal/h 80° H	If makers imprint is incorrect, the nozzle is incorrect	Replace incorrect nozzle for correct one

Phenomenon		Possible Cause	How to check	Result	Remedy
6. Smoke comes out.		Shortage of combustion air	Check extent of combustion air inlet opening	If combustion air inlet is too small, it burns in short of Oxygen	Extend combustion air inlet opening. Normal scale: MPX5 - 2.5 MPX1 - 4.5
		Decrease of airflow from fan motor	Check if fan is dusty	If fan is dusty, it is short of air	Clean fan
		Decrease revolutions of the fan motor (Power source voltage is insufficient)	Measure voltage at power source connector Standard: MPX5 - AC120V MPX1 - AC230V	If voltage at power source is lower than standard, combustion air is decreased because of low voltage	Check voltage
		Nozzle clogged	Replace nozzle	If it works normally, nozzle was	Replace nozzle
		Using at high altitude area (Low oxygen concentration)	Know the altitude if using at lower than the altitude of 1000m(3000ft)	If using at higher than the altitude of 1000m(3000ft), heater burns imperfectly because of shortage of oxygen	Extend combustion air inlet opening. Normal scale: MPX5 - 2.5 MPX1 - 4.5
		Incorrect nozzle	Check makers imprint of the nozzle if it is correct. Mark: 0.4USgal/h 80° H(danfoss)	If makers imprint is incorrect, the nozzle is incorrect	Replace incorrect nozzle for correct one
7. Combustion is not stable.		Loose joints in fuel line	Check looseness of each joint	If any joints are loose, air is absorbed into fuel lines from loose joint	Fasten joints more tightly
8. Fuel leaks.		Loose joints in fuel line	Check looseness of each joint	If any joint is loose, fuel is leaking	Fasten joints more tightly
		Failure of drain packing	Remove drain bolt after removing fuel from fuel tank, and then check whether packing isn't corrupted	Fuel leaks because of breach of packing	Replace drain packing
		Quantity of fuel in the fuel tank is too much	Check the fuel level	Fuel overflows because quantity of fuel in the fuel tank is too much	Decrease quantity of fuel in fuel tank

Phenomenon		Possible Cause	How to check	Result	Remedy
9. Fuse blows out	When the plug is put into the outlet.	Short circuit of transformer coil	Unplug transformer connector (CN 7) from burner controller, then measure coil resistance values of two leads Standard: MPX5 (white-red) - 230Ω (purple-purple) - 6.3Ω MPX1 (white-red) - 1.85kΩ (purple-purple) - 6.3Ω ・Without tester Unplug transformer connector (CN 7) from burner controller, then put plug into AC outlet	If either of the values is 0Ω, transformer is short-circuited If fuse doesn't blow out, transformer is short-circuited	Replace a transformer
		Short circuit of surge absorber (SA1)	Gauge resistance at surge absorber (SA1)	If resistance value is 0Ω, surge absorber is short-circuited	Replace burner controller
		Short circuit of pre-heater	Unplug transformer connector , then measure coil resistance values MPX5 - about 735Ω MPX1 - about 2700Ω	If resistance value is 0Ω, pre-heater is short-circuited	Replace pre-heater
	When the switch is turned on.	Short circuit of fan motor coil	Unplug fan connector (CN 3) from burner controller, then measure resistance between terminals	If resistance value is 0Ω, fan coil is short-circuited	Replace fan motor
		Short circuit of igniter	Unplug igniter connector(CN 4) from burner controller, then measure resistance between terminals ・Without tester Unplug igniter connector (CN 4), and then start operation	If resistance value is 0Ω, primary side of igniter is short-circuited If fuse doesn't blow out, igniter is short-circuited	Replace igniter
		Short circuit of solenoid valve	Unplug transformer connector , then measure coil resistance values MPX5 - about 1.8kΩ MPX1 - about 4.7kΩ	If resistance value is 0Ω, solenoid valve is short-circuited	Replace solenoid valve
	About 5 seconds after turning on	Short circuit of fuel pump coil	Unplug fuel pump connector (CN 6) from burner controller, then measure resistance between terminals ・Without tester Unplug fuel pump connector (CN 6), then turn on	If resistance value is 0Ω, fuel pump coil is short-circuited If fuse doesn't blow out, pump coil is short-circuited	Replace fuel pump
	About 20~30 seconds after turning on	Short circuit of Blower motor	Unplug blower motor connector (CN 5) from burner controller, then measure resistance between terminals(4-5PIN)	If resistance value is 0Ω, blower motor is short-circuited	Replace blower motor

7 Standard resistance & Standard Voltage

★Standard resistance of functional parts

Parts	Connector No		Lead	Condition	Resistance		Memo
					MPX5	MPX1	
Operating Switch	CN8	1-2PIN	Red-Red	On	0Ω		
				Off	∞Ω		
change-over Switch		4-5PIN	White-White	On	0Ω		
				Off	∞Ω		
Overheat Protection	CN13	1-2PIN	Red-Red	not in working	0Ω		
				in working	∞Ω		
Tip-over Switch		3-4PIN	Black-Black	not in working	0Ω		Operation angle: 50 ― 80°
				in working	∞Ω		
Flame Monitor	CN11		White-White (Red Line)	dark	about DC5V		
				light	DC1.2V and under		
Transformer	CN7		Red-White	input	about 230Ω	about 1.85kΩ	
			Purple-Purple	output	about 6.3Ω	about 6.3Ω	
Igniter	CN4		Black-Black (thin)	input	-	-	
			Black-Black (bold)	output	about 4kΩ	about 2.8kΩ	
Fuel Pump (Pump coil)	CN6	2-4PIN	Blue-Blue	-	about 89Ω	about 395Ω	
Fuel Pump (Switching solenoid valve)		1-3PIN	yellow-yellow	-	about 700Ω	about 3.25ｋΩ	
Fan Motor	CN3	1-2PIN	Black-Red	High	about 20Ω	about 125Ω	Normal scale 2.5（MPX5） Normal scale 4.5（MPX1）
		1-3PIN	Black-Blue	Low	about 26Ω	about 227Ω	
Blower Motor	CN5	4-5PIN	Black-Black	-	about 16Ω	about 88Ω	
Fuel pre-heater		1-3PIN	White-Blue	in working	about 735Ω	about 2700Ω	
Thermostat for pre-heater	*1		Blue-Blue	not in working	0Ω		20±5℃ off
				in working	∞Ω		5±5℃ on
Solenoid Valve	CN10		Red-Red (MPX5) yellow-yellow (MPX1)	-	about1.8kΩ	about4.7ｋΩ	

*1 Attached to pre-heater

★Input &Output of Burner Control

Parts	Connector No		Lead	Condition	Voltage		Memo
					MPX5	MPX1	
Power Cable	CN1		Black - White (MPX5) Brown - Light Blue (MPX1)	-	AC 120V (±10%)	AC 230V (±10%)	
Transformer	CN7		Red - White	input	AC 120V (±10%)	AC 230V (±10%)	
			Purple - Purple	output	about AC 15V		
Igniter	CN4		Black - Black (thin)	input	AC 120V (±10%)	AC 230V (±10%)	
Fuel Pump (Pump coil)	CN6	2-4PIN	Blue-Blue	-	AC 60-96V	AC 115-184V	*1
Fuel Pump (Switching solenoid valve)	CN6	1-3PIN	yellow-yellow	-	AC 120V (±10%)	AC 230V (±10%)	
Fan Motor	CN3	1-2PIN	Black-Red	High	AC 120V (±10%)	AC 230V (±10%)	
		1-3PIN	Black-Blue	Low	AC 120V (±10%)	AC 230V (±10%)	
Blower Motor	CN5	4-5PIN	Black-Black	-	AC 120V (±10%)	AC 230V (±10%)	
Fuel pre-heater	CN5	1-3PIN	White-Blue	in working	AC 120V (±10%)	AC 230V (±10%)	
Solenoid Valve	CN10		Red-Red (MPX5) yellow-yellow (MPX1)	-	about AC 100V	about AC115V	*2

*1/*2 Output voltages vary according to mesuring instrument because they are half-wave/full-wave rectification

8 Check & Repair

Figure 1	Removing a burner cover	16
Figure 2	Removing a burner unit	16
Figure 3	Mesuring resistance	17
Figure 4	Mesuring voltage	17
Figure 5	Checking a surge absorber (SA1)	17
Figure 6	Replacing a fuse	18
Figure 7	Checking a filter element	18
Figure 8	Checking a fuel tank	19
Figure 9	Checking a fuel pump	19
Figure 10	Positioning a electrode	20
Figure 11	Cleaning a frame monitor	20
Figure 12	Checking a burner cone and whirl vane	21
Figure 13	Adjusting an air inlet opening of fan motor	22
Figure 14	Checking a pre-heater	23

Figure 1 Removing a burner cover

Unscrew two screws and take burner cover off

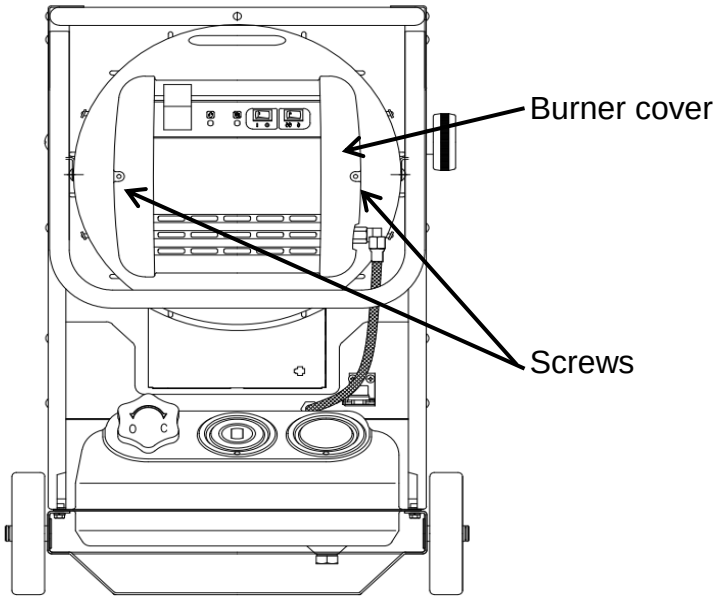

Figure 2 Removing a burner unit

Unscrew three nuts as below and take the burner unit off

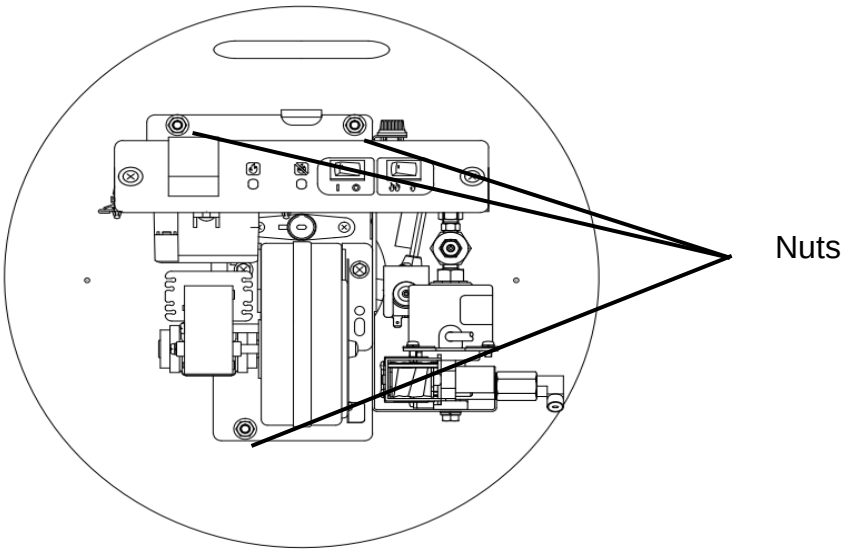

Figure 3 Mesuring resistance

① Unplug an intended connector from burner controller

② Turn on the multimeter and set multimeter range

③ Insert the lead head of multimeter to connector [lead wire side] and measure resistance

Figure 4 Mesuring voltage

① Operate the heater

② Turn on the multimeter and set AC voltage range (partially direct current range)

③ Insert the lead head of multimeter to connector and measure voltage

Observation

※ Be sure to set resistor at proper range

※ Be careful not to insert the lead head of resistor strongly since damage in connector may occur

Figure 5 Checking a surge absorber (SA1)

Take out the burner controller, and point the lead head at solder part of SA1

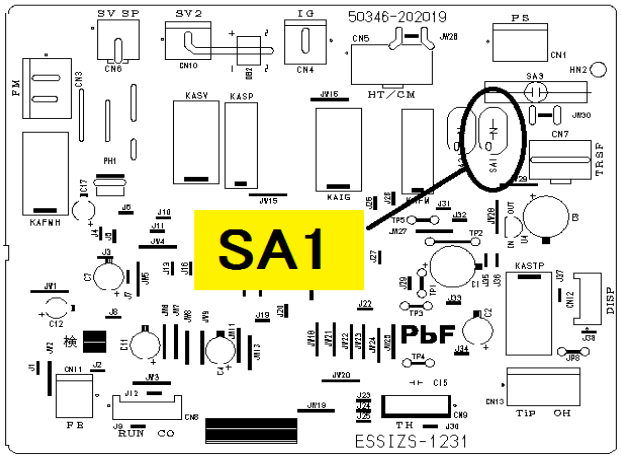

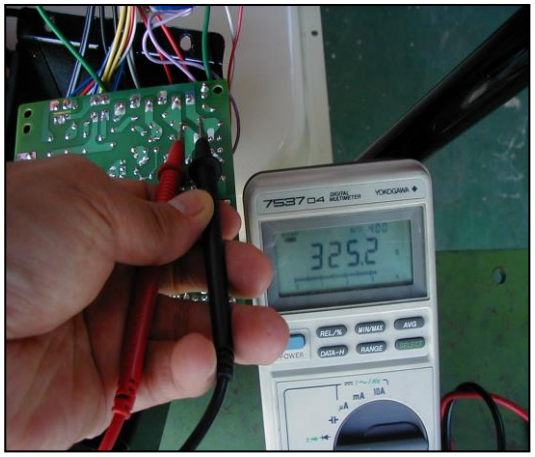

Figure 6 Replacing a fuse

Be sure to unplug the power plug then open the fuse cap and Check whether fuse is blown out

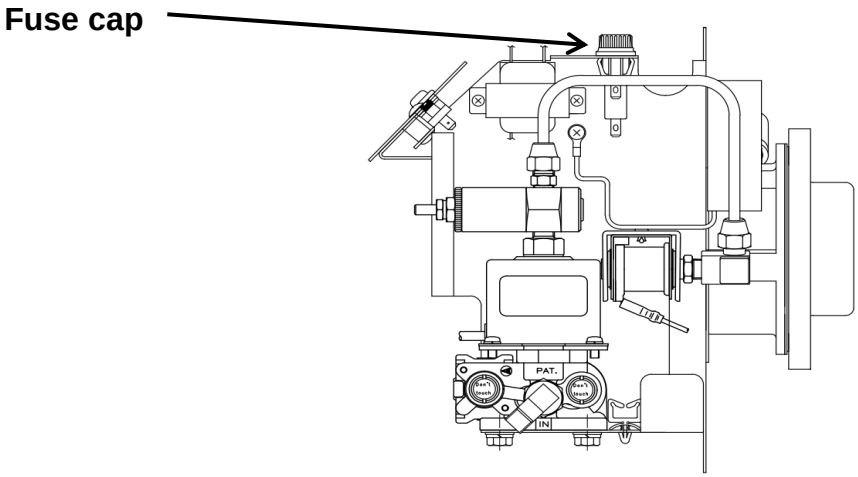

Figure 7 Checking a filter element

Check whether or not the filter element is dirt or foul
In case the filter element is dirty, replace it with a new one

1. Remove the suction pipe from the fuel tank.
2. If the filter is dirty, replace it with a new one.
3. Return the suction pipe to the fuel tank and firmly secure.

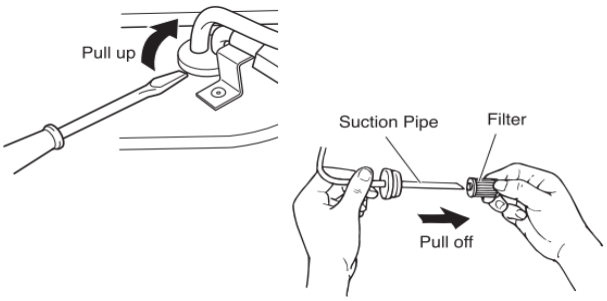

Figure 8 Checking a fuel tank

1. Remove the fuel cap and insert a suction pump into the tank.
2. Remove as much fuel as possible (with the suction pump). Be sure that the fuel being removed is put only into a can or other container approved in your area for holding flamable liquids such as kerosene and Fuel-Oil no heavier than No.2 (Diesel)
3. Tighten the fuel cap firmly.
4. Prepare an empty container of about 3 liters (0.7gallons) capacity: to hold kerosene and water remaining in the fuel tank, place the container under the drain bolt (of the fuel tank).
5. Next, use a 24mm wrench to remove the drain bolt and tilt the fuel tank until the fuel is completely drained out of the tank. (At the same time, be careful not to lose the drain bolt packing.)
6. Restore the drain bolt packing and tighten the drain bolt firmly so that fuel can not leak out (of the fuel tank).
7. Wipe off kerosene or water spilled over the tank and the surrounding area.
8. Be sure to dispose of in a safe manner as approved in your local area the kerosene, etc, placed in the empty container and the materials used to clean up any spilled kerosene, etc. Safely clean and/or dispose of the empty container as also approved in your local area.

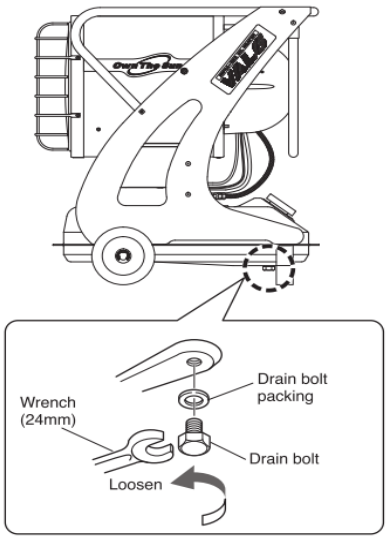

Figure 9 Checking a fuel pump

Take out a fuel outlet line then check whether or not fuel comes out
CAUTION: Fuel will squirt cheerfully

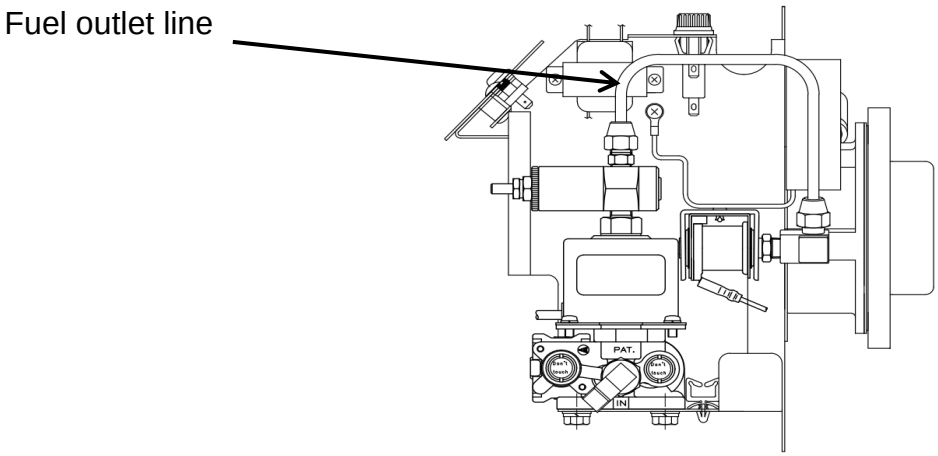

Figure 10 Positioning a electrode

Take out a burner and check each clearance as below

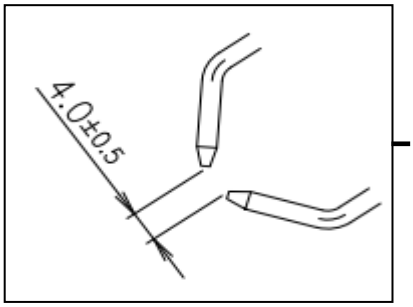

Tip of electrode

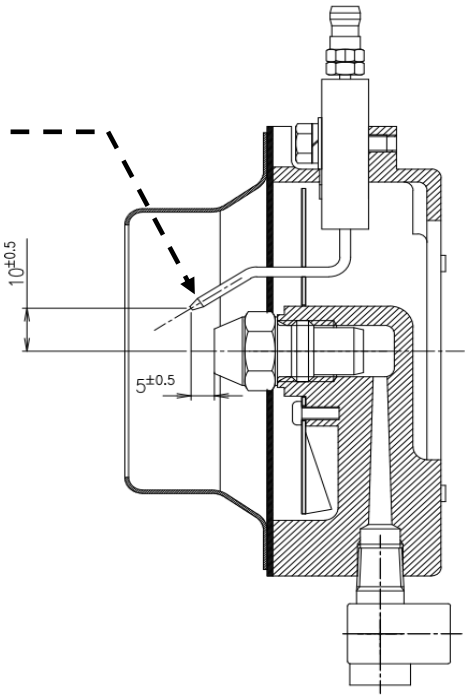

Observation

Manufacturer does not recommend to fix electrode as they are very sensitive to position, so it is recommended to replace it.

Figure 11 Cleaning a frame monitor

Observations

- When removing the flame monitor, hold it by its main assembly; do not pull out the cord.

1 Remove the burner cover and pull out the flame monitor, and check whether or not its lens is dirty/foul.

2 If the lens is dirty/foul, clean the surface of the lens with a soft cotton swab or cloth until it is clear. Do not use any cleansers of any type, e. g., glass cleaner, to clean the lens.

3 Replace the flame monitor. Then securely replace the burner cover using the provided screws.

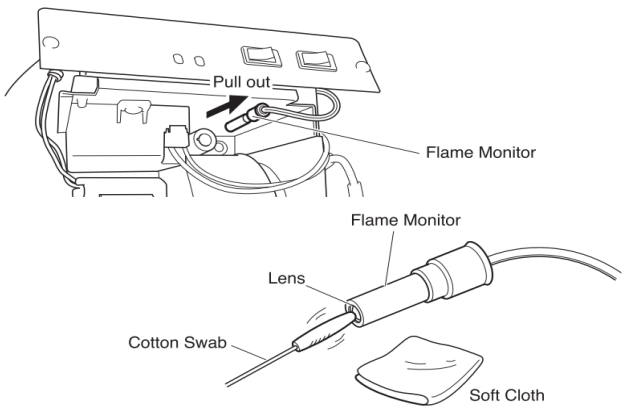

Figure 12 Checking a burner cone and whirl vane

Take out a burner and check whether or not burner cone and whirl vane are dirt or not. In case the burner cone and/or whirl vane is dirty, clean it(them) with cloth or brush. Infrequently abrasive cleanser may be required

CAUTION

When cleaning, be sure not to get soot or dust to adhere to the nozzle. It may cause nozzle clogged or abnormal spray

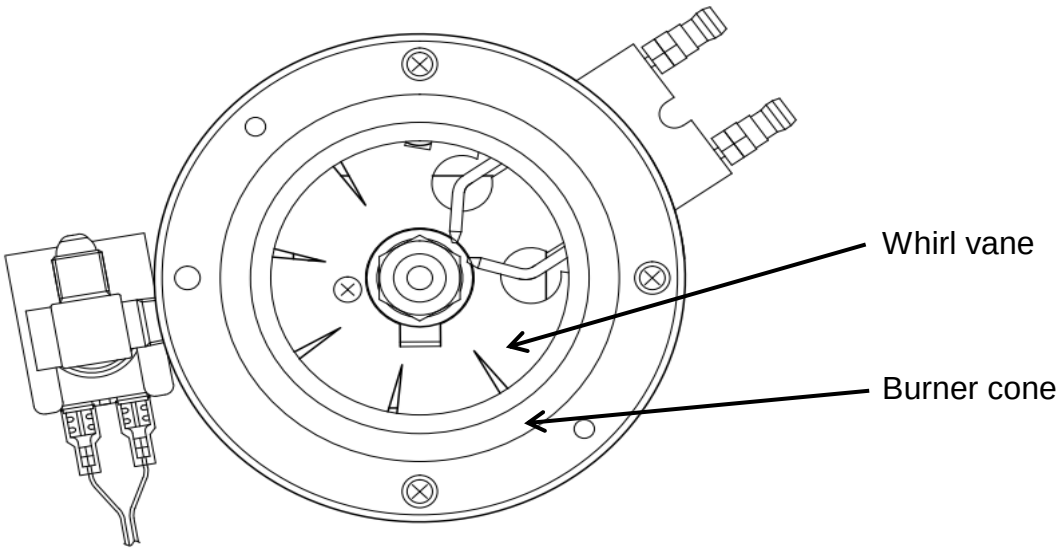

Figure 13 Adjusting an air inlet opening of fan motor

Unscrew a decorative screw and then extend/narrow an air inlet opening.
Also trial operation is required after each adjustment.
Be sure to repeat adjustment until following symptoms are identified.

- Heater ignites within one second after pump starts to operate
- There is no dark smoke
- White smoke extinguishes within two seconds after ignition
- Flame bounces out from the disk
- Smell of fuel clear within ten seconds after ignition

	Scale
MPX5	2.5
MPX1	4.5

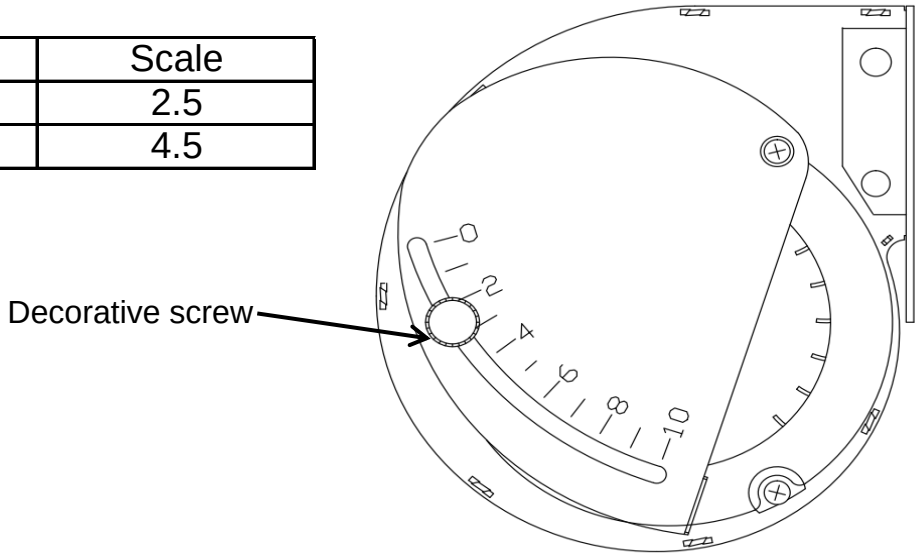

Observation

When heater is used above 1,000m(3,000ft) sea level, adjust air inlet on fan motor for better combustion

Figure 14 Checking a pre-heater

①Unplug the connector of pre-heater
②Measure resistance of the pre-heater between A and B. (see below graphic illustration) Standard resistance: 735Ω

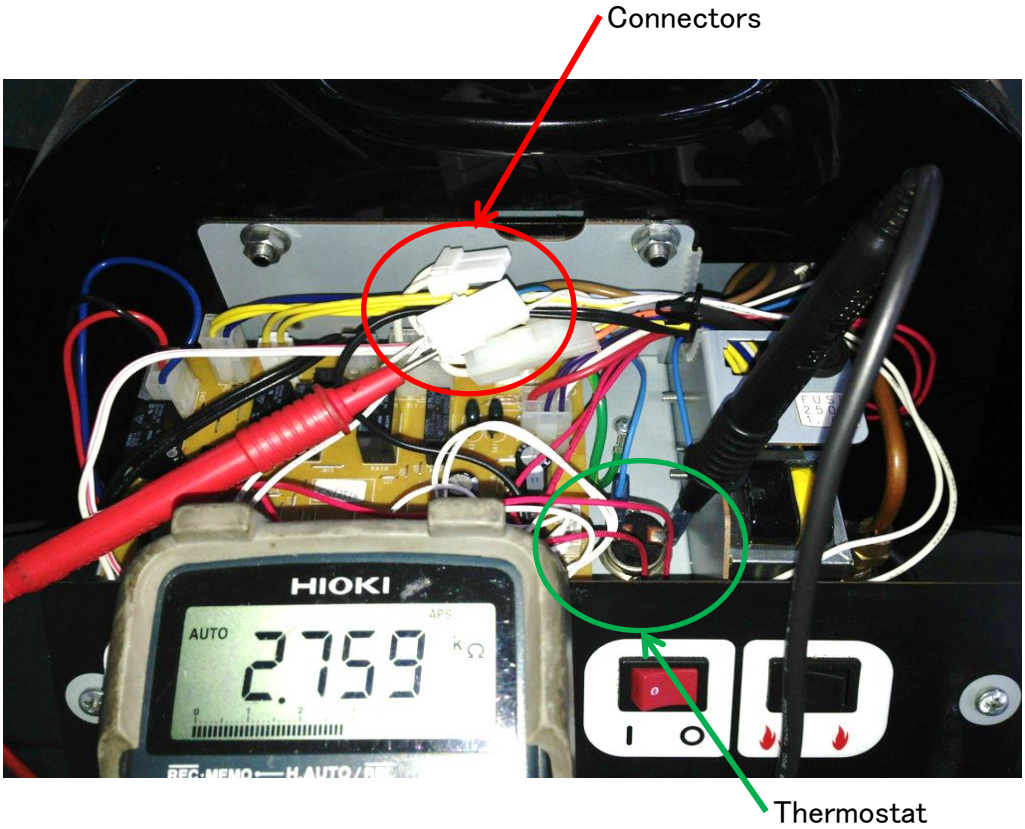
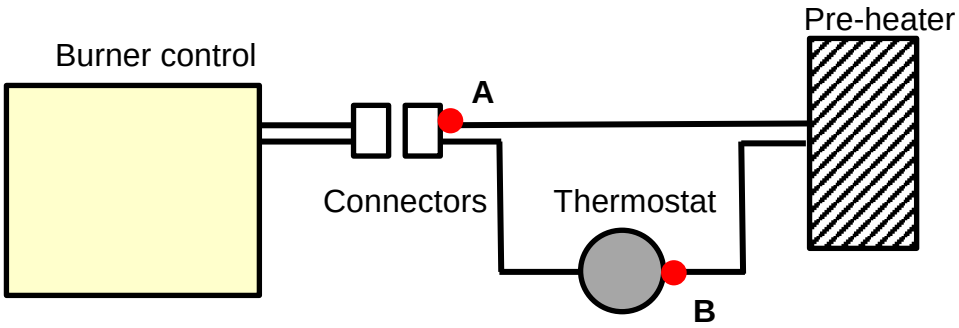
Graphic illustration